兴荣亚
XINGRONGYA

DONGFENG GX & KX SERIES PRODUCT MANUAL

兴荣亚
XINGRONGYA

Shiyan Xingrongya Automobile Sales and Service Co., Ltd.

Add: No.18 Longmen Avenue,Shiyan City,Hubei Province,China
Tel: +86 15871111333
Web: www.xrydongfeng.com
E-mail: CEO@xrydongfeng.com

WhatsAPP WeChat

Shiyan Xingrongya Automobile Sales and Service Co., Ltd.

CATALOGUE

COMPANY PROFILE ····· 01

VEHICLE MODEL INTRODUCTION ····· 05

BODY SYSTEM COMPONENTS ····· 07

BODY ACCESSORY SYSTEM COMPONENTS ····· 10

BODY ELECTRICAL COMPONENTS ····· 11

CHASSIS ELECTRICAL COMPONENTS ····· 13

BRAKE SYSTEM COMPONENTS ····· 14

AIR CONDITIONING COOLING SYSTEM COMPONENTS ····· 15

INTAKE AND EXHAUST SYSTEM COMPONENTS ····· 16

POWERTRAIN SYSTEM COMPONENTS ····· 17

STEERING TRANSMISSION SYSTEM COMPONENTS ····· 19

CHASSIS SYSTEM COMPONENTS ····· 20

兴荣亚 XINGRONGYA

Enterprise Introduction

Shiyan Xingrongya Automobile Sales and Service Co., Ltd.

In 2019, Shiyan Xingrongya Automobile Sales and Service Co., Ltd. was established as the situation required in Shiyan City, Hubei Province, which is known as the "Truck Capital of China". As a wholly-owned subsidiary that the Commercial Vehicle Business Department of Xingrongya Group has focused on building to explore the new blue ocean of the commercial vehicle aftermarket and lay out a global strategy, the company's core business focuses on the domestic and overseas import and export trade of Dongfeng commercial vehicle parts, and is committed to building a parts supply chain service system that connects domestic and foreign markets.

The headquarters of Xingrongya Group is located in Xiangyang City, an important transportation hub city in northwestern Hubei. As a first-level authorized dealer of various commercial vehicles and passenger vehicles of brands under Dongfeng Motor Corporation, the group successfully ranked among the top 10 core strategic dealers of Dongfeng Company nationwide in 2012. In terms of the truck parts business, the company is the spare parts agency central warehouse for the full range of models of Dongfeng heavy trucks, medium trucks and light trucks. It has a rich reserve of parts products, including the whole vehicle series of spare parts such as engines, gearboxes, body systems, electrical and electronic components, braking systems, cooling systems, steering systems, suspension systems, and axle components. The company carefully selects suppliers to ensure that the quality of parts meets international standards.

Shiyan Xingrongya has a professional, efficient and innovative team. The sales staff have rich industry knowledge and sufficient sales experience, and can provide customers with high-quality products and satisfactory after-sales technical support.

Looking ahead, Shiyan Xingrongya will continue to forge ahead bravely, constantly expand its business areas and improve its service quality. With greater enthusiasm and firmer belief, we will create greater value for our customers and contribute to the development of international trade and the truck industry.

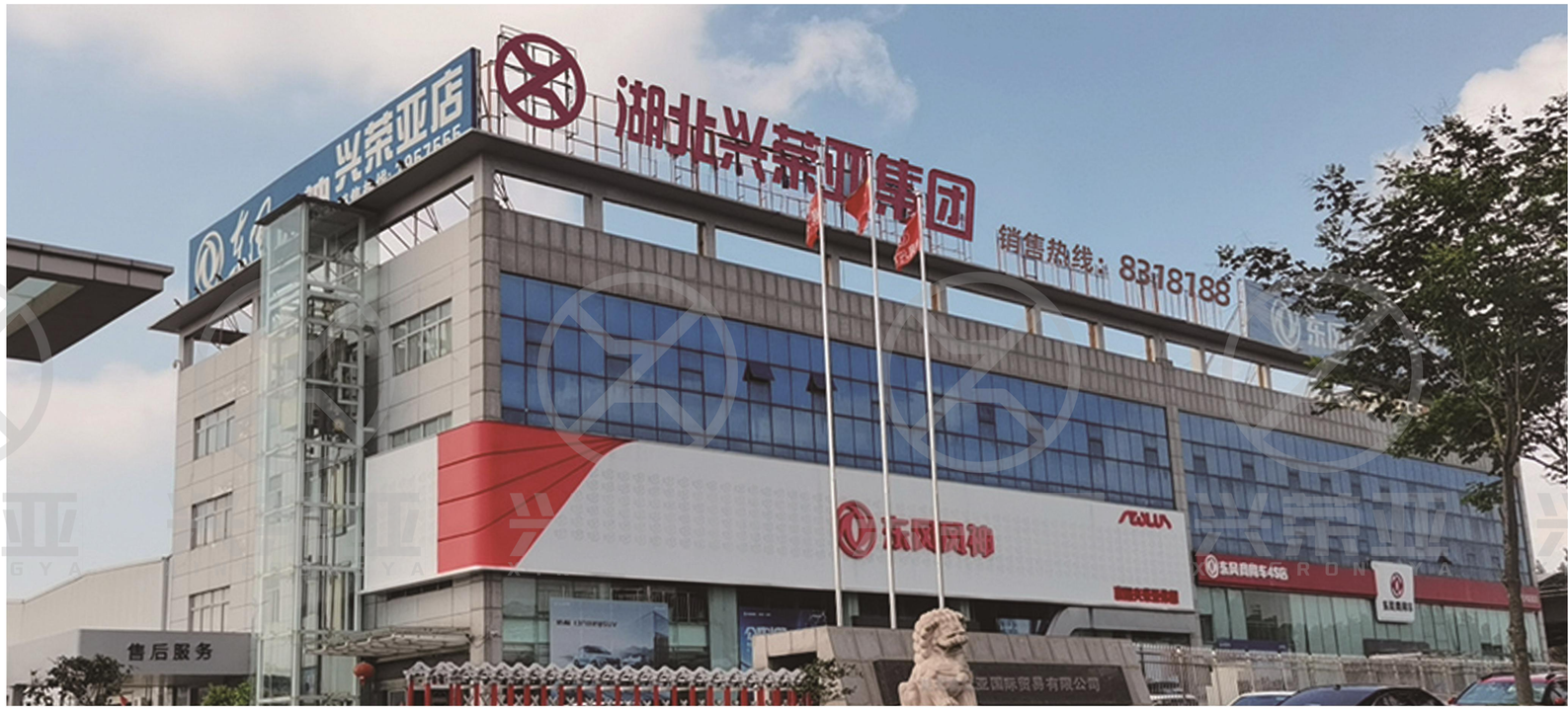

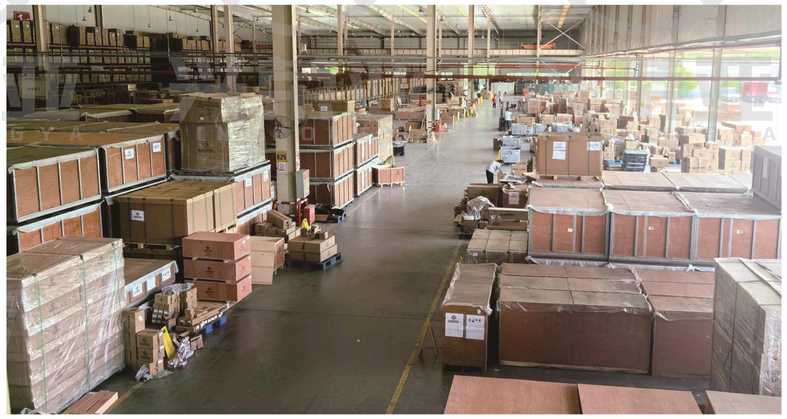

Honors & Qualifications

Fig. 1 Authorized Distributor of DFCV Genuine Parts
Fig. 2 Marketing Innovation Award
Fig. 3 Sales Contribution Award
Fig. 4 Sales Contribution Award
Fig. 5 Gold Medal Aftermarket Manager
Fig. 6 Best Channel Partner
Fig. 7 Excellent Industrial Engineer
Fig. 8 Outstanding Aftermarket Distributor
Fig. 9 Top 100 Distributors
Fig. 10 Municipal Model Enterprise of Civilization and Integrity

Cooperative Partner

DFMIEC
东风商用车 DONGFENG TRUCKS
东风华神 东风新一代
DFAC 东风轻型车 Dongfeng Automobile Company

DCEC
Cummins 龙擎 LOONG-GINE DDI ENGINE
RENAULT DCI ENGINE
玉柴机器 YC DIESEL

Fast transmission
EATON CUMMINS TRANSMISSION
东风德纳车桥 DANA AXLE
汉德车桥 HANDE AXLE

Fleetguard 上海弗列加
SACHS
WABCO
KNORR BREMSE

DONGFENG GX

The Dongfeng GX is a new-generation high-efficiency heavy-duty truck developed by Dongfeng Commercial Vehicles for the high-end trunk logistics market. Integrating leading technologies, excellent performance and intelligent configurations, it is committed to providing users with efficient, reliable and comfortable transportation solutions. With the core concept of "Efficient Creation and Win", the Dongfeng GX redefines the value benchmark of high-end heavy-duty trucks.

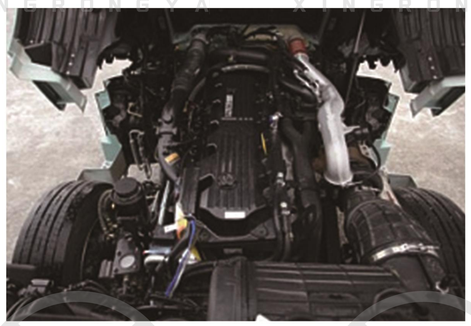

DONGFENG KX

Dongfeng KX is the flagship heavy-duty truck developed by Dongfeng Commercial Vehicles for long-haul trunk logistics. Guided by the core concept of "Flagship Navigation", it integrates cutting-edge intelligent technology with ultimate comfort design. Built to military-grade quality standards, the vehicle features a panoramic cockpit, intelligent driving ecosystem, and humanized living space, balancing efficient operation with premium driving experience.

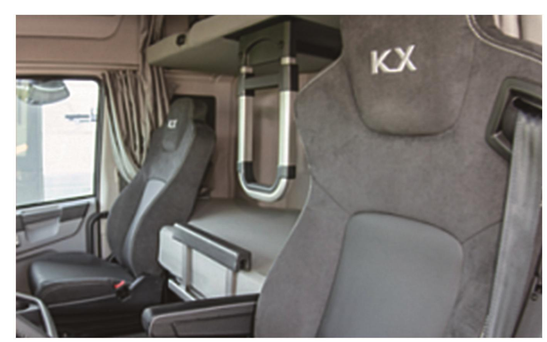

5000012-C6300-37
驾驶室总成-GX
Cab Assy-GX

5000012-C6301-0B
驾驶室总成-KX新款
Cab Assy-New KX

5000012-C6101-EP
驾驶室总成-KX
Cab Assy-KX

50M14-C62GY98
驾驶室壳体-天龙GX
Cab Shell-Kinland GX

5400011/12-C6101
左右侧围焊接总成
Side Panel Assy

5401329/30-C6100
左右支柱连接板总成
Pillar Assy

5300010-C6200
前围焊接总成
Front Panel Assy

5701010-C6100
前顶盖焊接总成
Front Roof

5100010-C6119
地板焊接总成
Vehicle Floor Panel

5600010-C6200
后围焊接总成
Rear Panel Assy

5301515-C6227#KH
前面罩总成-GX
Front Fascia Assy-GX

5301515-C6201#KH
前面罩总成-KX新款
Front Fascia Assy-New KX

5301515-C6100#KH
前面罩总成-KX
Front Fascia Assy-KX

6100910/20-C62GY77/78
车门总成
Door Assy

6100011/12-C6101
车门壳体
Door shell

标牌
Auto Logos

8201005/015-GX106
后视镜总成
Side Mirror Assy

8219005-GX200
前下视镜及支座总成
Under-view Mirror

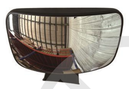
8219105-C6200
补盲镜总成
Blind Spot Mirror Assy

8204510/15-C6101/00
遮阳罩及支架
Windshield sunshade

8405207/09-C6200
脚踏板
Foot Pedal

8405223/26-C6201
左右上脚踏板护罩总成
Left and Right Upper
Step Pedal Guard Assy

8405324/25-C6202
左右下脚踏板护罩
Left and Right Lower
Step Pedal Guard

6101631/32-GX200
车门裙板总成
Door Skirt Panel Assy

8403409/10-C6200
右轮罩总成
Right Wheel Housing Assy

8403319/20-C6100
内挡泥板总成
Inner Fender Assy

8403059-C6210
后挡泥板总成
Rear Fender Assy

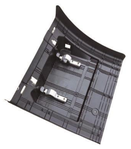
8511020/25-H18A0
前挡泥板总成
Front Fender Assy

8511015-H11A0
上挡泥板总成
Upper Fender Assy

8511130/40-H11A0
后挡泥板总成
Rear Fender Assy

车身系统部件
COMPONENTS OF THE VEHICLE BODY SYSTEM
Tel/WhatsAPP/FB:+8615871111333 Web:www.xrydongfeng.com E-mail:CEO@xrydongfeng.com

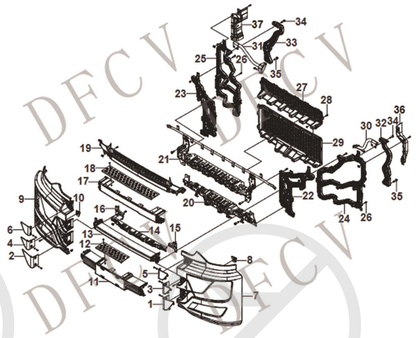
GX保险杠分解图
GX Bumper Exploded View Diagram

8406923/943-C6220
左右侧保险杠总成
Lamp Cover

8406613/14-C6220
中间保险杠
Center Bumper

8406035/37/38-C6200
保险杠格栅
Bumper Grille

8406131/32-C6900
左右支架-大灯
Head Lamp Bracket

8406141/42-C6200
左右支架-雾灯
Fog Lamp Bracket

8406161/162-C6200
连接支架-一级踏步
Connecting Bracket - First Step

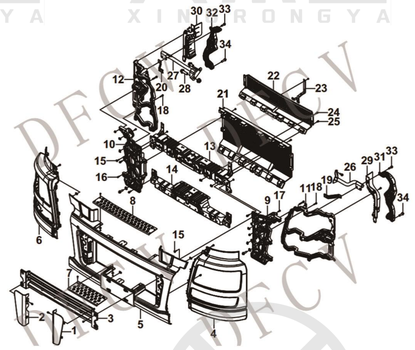
KX保险杠分解图
KX Bumper Exploded View Diagram

8406021/22-C6103
左右侧保险杠总成
Left and Right Side
Bumper Assembly

8406010-C6112
中间保险杠
Center Bumper

8406037/38-C6100
上下护网-保险杠
Upper and Lower
Guard Nets - Bumper

8406131/32-C6103
左右支架-大灯
Left and Right
Brackets - Headlight

8406161/62-C6103
连接支架-一级踏步
Connecting Bracket
First Step

8406161/62-C6103
连接支架-一级踏步
Connecting Bracket
First Step

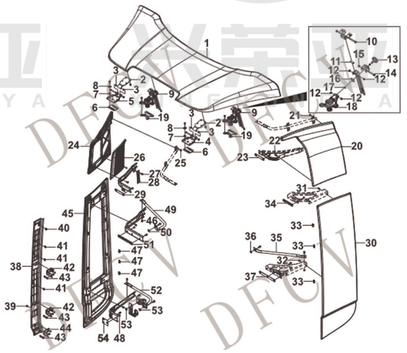
GX尾翼分解图
GX Spoiler Exploded View Diagram

8407127-GX000
顶扰流板总成
Roof Spoiler Assy

8407133/134-C6201
扰流板上部
Spoiler Upper Section

8407135/136-C6203
扰流板下部
Spoiler Lower Section

8407191-C6201
进气格栅
Air Intake Grille

8407155/158-C6100
上扰流板支架
Spolier Bracket

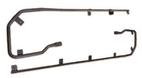
8407201/02-C6100
下扰流板支架
Spolier Bracket

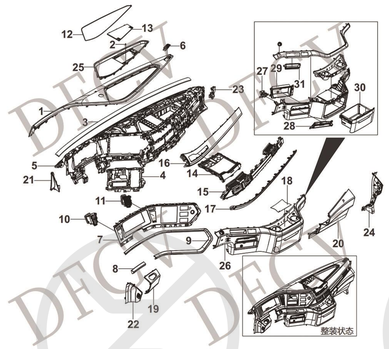

仪表台分解图
GX Dashboard Exploded View

5305910-C63GYMJ
仪表板工艺合件
Dashboard Process Assy

5305020-C6206
仪表板本体-司机侧
Dashboard Body - Driver Side

5305955-C6201
仪表面罩合件
Instrument Panel Cover Assy

5305117-C6200
中下护板总成
Middle-Lower Guard Plate Assy

5305210-C6206
仪表梁总成
Instrument Panel Beam Assy

暖风通道
Warm Air Duct

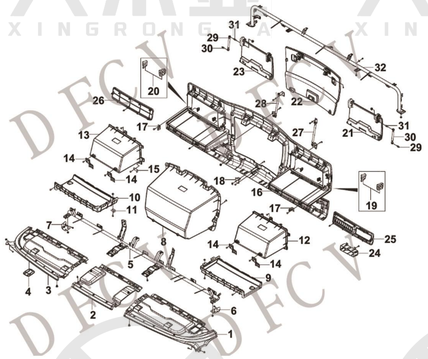

前顶杂物箱分解图
KX Bumper Exploded View Diagram

5704940-GX204
前顶面板及杂物盒工艺合件
Front Top Panel Assy

5704928-C6200
底板及眼镜盒工艺合件
Floor Panel and Eyeglass Case Process Assy

5703115-C6201
天窗总成-带玻璃
Skylight Assy with Glass

8204012-C6200
遮阳帘总成
Sunshade Assy

5402011/12-C6201
支柱护板
Strut Guard Plate

5301626-C6200
气动撑杆总成
Pneumatic Stay Assy

6800010-C6251
司机座椅
Driver's Seat

6900010-C6215
乘客座椅
Passenger Seat

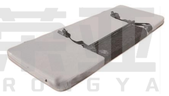

7600910-C6200
上卧铺带铰链合件
Upper Berth Hinge Assy with Hinges

6102015/16-C6203
车门护板总成-带密封条
Door Trim Panel Assy

5109010/30-C6237/C6213
左右地毯总成
Left and Right Carpet Assy

5104910-C6205
方向盘总成
Steering Wheel Assy

6107015-C6100
门框密封条总成
Door Frame Weatherstrip Assy

6107009/10-C6100
门框外密封条
Outer Door Frame Weatherstrip

5810015-C6150
安全带总成-乘客座椅
Seat Belt Assy Passenger Seat

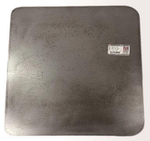

5407009-C6100
工具箱盖板
Toolbox Cover Plate

5001910-GX201
前悬置工艺合件
Front Mounting Process Assy

5001059/60-GX201
上支架总成-前悬置
Upper Bracket Assy - Front Moun

5001013/14-C6103
翻转支架-前悬置
Tipping Bracket - Front Mount

5001070-C6101
横向稳定杆总成
Lateral Stabilizer Bar Assy

5001080-C6208
气囊减振器总成-前悬置
Air Spring Damper Assy

5001920-GX210
后悬置工艺合件
Rear Mounting Process Assy

5001141/42-C6201/02
后悬下支架
Rear Suspension Lower Bracket

5001110/20-C6100
左右支架带橡胶套总成-后悬置
Left and Right Bracket Assy

5001146-C6200
后悬置横梁
Rear Mounting Crossbeam

5001180/85-C6209
气囊减振器总成-左右后悬置
Air Spring Damper Assy

5002160/65-C6200
左右液压锁栓带传感器总成
Hydraulic Lock Pin Assy

3739115-C5100
举升开关螺旋线总成
Lifting Switch Spiral Cable Assy

5001090-C6103
高度阀总成
Height Valve Assy

5001096-C6105
高度阀连杆
Height Valve Linkage

5001160-C6100
横向减震器
Lateral Shock Absorber

5003910-C6102
油缸总成带衬套工艺合件
Cylinder with Bushing Process Assy

5005010-C6104
手动油泵总成
Manual Oil Pump Assy

5005015-C6102
电动油泵总成
Electric Oil Pump Assy

5003085-C6100
油缸上支架总成
Upper Bracket Assy of Oil Cylinder

5003091-C6100
油缸下支座
Lower Support of Oil Cylinder

8403073-C6103
左右座板
Left and Right Seat Panels

8403070/75-C6201/C6103
左支架总成-后挡泥板
Left Bracket Assy

8403070-C6200
右支架总成-后挡泥板
Right Bracket Assy

8511040-H02B0
挡泥板支架
Fender Bracket

8511080/85-H11A0
后轮左右后支架总成
Rear Wheel Bracket Assy

8406810-C6204
防撞杆总成
Crash Bar Assy

2701510-H11A2
挂车阀支架总成
Trailer Valve Bracket Assy

1109016-H12B0
支架-空气滤清器
Bracket - Air Filter

1109019-HA410
垫块-空气滤清器支架
Pad - Air Filter Bracket

2901249-H02C1
固定端支架-前悬架右
Fixed End Bracket Front Suspension Right

3772010/20-C6203
前组合灯总成
Front Combination Lamp Assy

3732110/20-C6200
前雾灯及辅助远光总成
Fog Lamp Assy

3773010/20-C6201
后组合灯总成
Tail Lamp Assy

37ZB7-29520
后照灯总成
Rear Lamp Assy

3726210/20-C6200
侧转向灯总成
Side Turn Lamp Assy

3772010/20-C6102
前组合灯总成
Front Combination Lamp Assy

3732110/20-C6101
前雾灯及辅助远光灯总成
Fog Lamp Assy

3773010-T62H0
后组合灯
Tail Lamp Assy

3731010/20-C6100
前示廓灯总成
Front Clearance Light Assy

3760010-H0100
侧标志灯总成
Side Lamp Assy

3714060-C6201
前阅读灯总成
Reading Lamp Assy

3714150-C6202
顶灯总成
Overhead Light Assy

3714220-C6200
仪表夜间装饰灯总成
Instrument Panel Night Decorative Light Assy

3600010-C6300
整车控制单元总成
VECU Assy

3600040/45-C6201
车门控制单元总成
Door Control Unit Assy

3727005-GX307-03
车身主线束总成
Body Main Wire Harness Assy

3801050-C6203
组合仪表总成
Combination Instrument Panel Assy

1108010-C6101
加速踏板总成
Accelerator Pedal Assy

3774020-C6200\3774030-C6201
组合开关总成
Combination Switch Assy

3774150-C6200
时钟弹簧总成
Clock Spring Assy

6104010/20-C6200
门玻璃升降器总成
Power Window Regulator Assy

6105920/25-C6200
门锁体总成
Door Lock Body Assy

6105915-C6104
点火锁和门锁锁芯附钥匙合件
Ignition Lock & Door Lock Cylinder with Key Assy

3750710-C6300
集成式车门开关总成
Door Switch Assy

3750740-C6300
电动窗开关总成-乘客侧
Switch Assy - Passenger Side

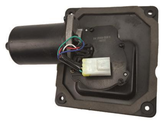
3741010-C6100
刮水器电机总成
Wiper Motor Assy

5205031-C6100
雨刮联动杆
Wiper Linkage Rod

5205011/12-C6100
刮臂刮刷总成
Wiper Arm and Blade Assy

5205013-C6100
刮刷总成
Wiper Blade Assy

3747910-C6100
洗涤器工艺合件
Washer Process Assy

车身电器部件 BODY ELECTRICAL COMPONENTS
Tel/WhatsAPP/FB:+8615871111333 Web:www.xrydongfeng.com E-mail:CEO@xrydongfeng.com

8115005-C6250
加热器总成
Heater Assy

3738110-C6101
DC-AC逆变器总成
DC-AC Inverter Assy

3637010-C4301
轮胎压力监测电控单元总成
Tire Pressure Monitoring ECU Assy

3637510-TL860
轮胎压力传感器总成
Tire Pressure Sensor Assy

3621180-C6203
AMT换档旋钮开关总成
AMT Shift Knob Switch Assy

3776930-C6201
左摄像头带装饰罩合件-环景影像
Surround View Left Camera Assy w/ Decor Cover

3776940-C6201
右摄像头带装饰罩合件-环景影像
Surround View Right Camera Assy w/ Decor Cover

3776920-C6100
前摄像头总成-环景影像
Front Camera Assy - Surround View Imaging

3641010-C6108
LDWS电控单元总成
LDWS Electronic Control Unit Assy

3776110-C6300
环景影像系统电控单元总成
SVI System ECU Assy

3750025-C6202
灯光旋钮开关总成
Lighting Knob Switch Assy

3774110/20-C6202
方向盘开关总成
Steering Wheel Switch Assy

7915137-C6201
多功能显示按键总成-侧围
Multi-function Display Button Assy - Side Panel

3723020-C5104
电源插座总成-USB充电
Power Socket Assy - USB Charging

3735090/95-C5100/01/C6100
继电器
Automotive Relay

3750060-C6200
危险警报开关总成
Hazard Warning Switch Assy

3750085-C6200
差速开关总成
Differential Switch Assy

3750380-C6106
EP选择开关总成
EP Selection Switch Assy

C3404013-C6200
转向柱调节开关-气动
Steering Column Adjustment Switch - Pneumatic

3750274-C6200
LDWS及FCWS开关总成
LDWS and FCWS Switch Assy

3681130-C6101
光照强度传感器总成
Light Intensity Sensor Assy

3603010-C6102
超声波雷达总成
Ultrasonic Radar Assy

3615690-C6100
环境温度传感器总成
Ambient Temperature Sensor Assy

3681120-C6100
室内温度传感器总成
Indoor Temperature Sensor Assy

3681110-C6100
室外温度传感器总成
Outdoor Temperature Sensor Assy

1104100-H02M0
供油转换开关总成
Fuel Supply Changeover Switch Assy

3724200-C6201
保险杠线束
Bumper Wire Harness

7920030-C62T0
GPS天线-TBOX
GPS Antenna - TBOX

3775020-C6104
扬声器总成
Loudspeaker Assy

3721050-C4103
电控双音气喇叭总成
E-C Dual-Tone Air Horn Assy

C4995445
电控模块
ECM

C2874453
发电机
Generator

C5547580
起动机
Starter

C5547554
空压机
Air Compressor

C2874117
压缩机
Compressor

3724420-C6300
SMJ盒-右
SMJ Box - Right

3724580-H06D1
车架线束
Frame Wire Harness

C4388985
发动机模块线束
Engine Module Wiring Harness

C6519693/94
电控模块线束
ECM Wiring Harness

3730030-H01A0
ABS电源线束总成
ABS Power Harness Assy

C4358810
压力传感器
Pressure Sensor

C4954905
温度传感器
Temperature Sensor

C5594276
位置传感器
Position Sensor

3833010-K0300
空滤阻塞传感器
Air Filter Clogging Sensor

3636410-TS360
气压传感器总成
Air Pressure Sensor Assy

3827010-H02B2
油量传感器总成
Fuel Level Sensor Assy

3827010-H02B1/B2
油量传感器总成
Fuel Level Sensor Assy

1125041-H02B0-SFG
水位传感器带O型圈总成
Water Level Sensor
Assy with O-Ring

3682810-H0100
气压过低报警传感器总成
Low Air Pressure Alarm Sensor Assy

3629610-HA430
高度传感器总成
Height Sensor Assy

3736010-TL770
电源总开关总成
Main Power Switch Assy

3750665-KE200
停机开关总成
Shutdown Switch Assy

3750662-KE200
副起动开关总成
Auxiliary Starter Switch Assy

3550050-H03R0
轮速传感器总成
Wheel Speed Sensor Assy

2411021-ZM01AD
差速传感器总成
Differential Sensor Assy

3771110-H19A0
底盘配电盒总成
Chassis Power Distribution Box Assy

3600035-C6200
底盘控制单元总成-含软硬件
CCU Assy - Including
Hardware and Software

3730020-T38H0
ABS挂车电缆插座总成
ABS Trailer Cable Socket Assy

3730040-H03K0
ABS挂车螺旋线总成(EBS)
ABS Trailer Coiled Cable Assy (EBS)

3730065-H0100
挂车电缆线
Trailer Cable

3514210-K20X0
制动信号发射器总成
Brake Signal Transmitter Assy

3543010-92302
空气干燥器总成
Air Dryer Assy

3543080-TL380
干燥筒总成
Air Dryer Cartridge Assy

3534010-H0100
限压阀总成
Pressure Limiting Valve Assy

3517010-92300
手控制动阀总成
Hand Control Brake Valve Assy

3506202-H02V4
第一空气管总成
No.1 Air Pipe Assy

3682610-C3100
气压表传感器
Air Pressure Gauge Sensor

RQ83122T3C
放水阀
Drain Valve

RQ83622N4N6E
F型三通快插管接头
F-Type Tee Quick
Connect Pipe Fitting

33513550-91450
双腔贮气筒总成
Dual-Chamber Air
Reservoir Assy

3521010-K0100
气制动接头总成-供能
Air Brake Joint Assy

3521020-K0100
气制动接头总成-控制
Air Brake Joint Assy

3506570-H0100
气制动螺旋管总成
Air Brake Coiled Hose Assy

3730060-H0100
ABS电缆线总成
ABS Cable Harness Assy

3730010-H03K0
电连接器插座总成
Electrical Connector Socket Assy

3553210-93000
前桥制动控制模块总成
Front Axle Brake
Control Module Assy

3553010-93000
后桥制动控制模块总成
Rear Axle Brake
Control Module Assy

3527020-90022
差动阀总成
Differential Valve Assy

3527010-93102
继动阀总成
Relay Valve Assy

3754120-H02V0
双联组合电磁阀总成
Dual Combination
Solenoid Valve Assy

3522210-91000
挂车阀总成-EBS
Trailer Valve Assy - EBS

3550010-KG1X0
ABS电磁阀总成
ABS Solenoid Valve Assy

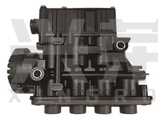
2939010-92100
ECAS电磁阀总成
ECAS Solenoid Valve Assy

3629010-C6101
ECAS空气悬架控制器总成
ECAS Air Suspension
Controller Assy

3632010-C6401
EBS电控单元总成
EBS ECU Assy

3724550-H0100
车架EBS+ESC线束总成
Frame EBS + ESC
Wiring Harness Assy

3629110-C6101
ECAS遥控器总成
ECAS Remote Control Assy

3629110-C3300
ECAS遥控器总成
Rear Axle Brake
Control Module Assy

3502420-H18A0
左盘式制动器及气室总成
Left Disc Brake and
Air Chamber Assy

3502425-H18A0
右盘式制动器及气室总成
Right Disc Brake and
Air Chamber Assy

空调冷却系统部件 AIR CONDITIONING COOLING SYSTEM COMPONENTS

1301010-H12B0
散热器总成
Radiator Assy

1309011-HA430
护风罩
Windshield Guard

1303011/13-H01A0
进出水胶管-散热器
Inlet and Outlet Rubber Hoses - Radiator

1309015-H19D0
导流罩总成
Air Deflector Assy

1309020/26/31/36-H01V0
支杆-导流罩
Support Rod - Air Deflector

1119010-H19G0
中冷器总成
Intercooler Assy

1310310-H01A0
防虫网总成
Insect Screen Assy

1119125-H0100
出气胶管总成-中冷器
Intercooler Outlet Rubber Hose Assy

1119012-H01A0
出气钢管-中冷器
Air Outlet Steel Pipe - Intercooler

1302046/67-H0100
支架-散热器
Bracket - Radiator

1308060-TF490
硅油风扇离合器带风扇总成
Silicone Oil Fan Clutch with Fan Assy

1308010-XLTF490
风扇总成
Fan Assy

1308065-XLTF490
电控硅油离合器总成
Electrically Controlled Silicone Oil Clutch Assembly

C2874119
风扇轮毂
Fan Hub

C2874280
风扇皮带轮
Fan Pulley

1311010-H01A0
膨胀箱总成
Expansion Tank Assy

1311040-HA430
回水钢管总成
Return Water Steel Pipe Assy

1311031/32/33-H12B0
除气胶管
Degassing Rubber Hose

1303015-H19H0
连接管总成
Connecting Pipe Assy

1302021/22-H12B1/ B0
减振垫-散热器
Vibration Damping Pad - Radiator

8110010-GX260
空调总成
Air Conditioning Assy

8105010-C6103
冷凝器总成
Condenser Assy

C4316845
空调压缩机
Air Conditioning Compressor

C4320327
皮带涨紧轮-空调
Air Conditioning Belt Tensioner

C5580038
多楔带-空调
Poly-V Belt - Air Conditioning

8103111-C6160
空调滤芯
Air Conditioning Filter

8101020-C6100
D760暖风芯子
D760 Heater Core

8112010-GX210
空调控制器总成
Air Conditioning Controller Assy

8108030-C6110
空调管路总成-连冷凝器出口
Air Conditioning Pipe Assy Connecting to Condenser Outlet

8106010-C3100
膨胀阀总成
Expansion Valve Assy

进排气系统部件 INTAKE AND EXHAUST SYSTEM COMPONENTS

Tel/WhatsAPP/FB:+8615871111333 Web:www.xrydongfeng.com E-mail:CEO@xrydongfeng.com

1109810-H12B0
进气引入管总成-驾驶室
Cab Intake Duct Assy

1109815-H12B0
波纹管-进气引入管
Bellows - Intake Inlet Pipe

1109040-H12B0
后进气道总成
Rear Air Intake Duct Assy

1109039-H12B0
胶管-接空滤器
Hose - Connect to Air Filter

1109027-HA410
进气胶管－空气滤清器出口
Intake Rubber Hose

1109010-H12C0
空气滤清器总成
Air Filter Assy

1109910-H12C0/AA90232
空滤器滤芯套装合件
Air Filter Element Kit Assy

1109016-H12B0
支架-空气滤清器
Bracket - Air Filter

1109133-H02G0
空压机进气胶管-B
Air Compressor Intake Rubber Hose - B

1203091-TF680/H0100
密封垫
Gasket

1205920-HA430
后处理器及安装工艺合件
Aftertreatment Device and Installation Process Kit

1205251-TL451
支架-后处理器
Bracket - Aftertreatment Device

1205263/64-H19C0/H20G0
支架-后处理器
Urea Mixer

1205271-TL770
箍带-后处理器
Band Clamp Aftertreatment Device

1203095-TF680
T型卡箍
T-Type Hose Clamp

1204031-H02M0
隔热罩
Heat Shield

1202010-HA432
金属软管总成
Metal Flexible Hose Assy

1203410-HA431
消声器前进气管总成
Front Inlet Pipe Assy of Muffler

1203420-HA431
消声器后进气管总成
Rear Inlet Pipe Assy of Muffler

1203061-TK341
消声器后尾管
Muffler Tail Pipe

AB510GV72
尿素罐总成
Urea Tank Assy

AB552WZ68
尿素罐支架
Urea Tank Bracket

1205541-H02V0
尿素罐护罩
Urea Tank Shield

AS2474
滤芯-尿素
Filter Element

1205530-H0100-HJ
尿素箱盖总成带钥匙
Urea Tank Cap Assy with Key

A042P115
尿素计量泵
Urea Metering Pump

3615710-T39H0
NOX传感器总成
NOX Sensor Assy

A060Z434
液位温度传感器
Liquid Level and Temperature Sensor

1205750-T39H0
喷射器总成
Injector Assy

A062U201
DOC氮氧化物捕捉器
DOC Nitrogen Oxide Trap

1000020-E79A4
ISZ520 52发动机总成
ISZ520 52 Engine Assy

C5680809
缸体总成
Cylinder Block Assy

C2874198/C5612712
缸盖
Cylinder Head

C4975249
缸盖密封垫
Cylinder Head Gasket

C4316828
曲轴
Crankshaft

C4327409
连杆
Connecting Rod

C5472293
缸套
Cylinder Liner

C4365930
活塞
Piston

C4365700/02
活塞压缩环
Piston Compression Ring

C4975036
活塞销
Piston Pin

C4999939
曲轴瓦上瓦
Upper Main Bearing
Shell of Crankshaft

C4999940
曲轴瓦下瓦
Lower Main Bearing
Shell of Crankshaft

C4999948/49
连杆瓦
Connecting Rod Bearing

C2873959
曲轴止推瓦
Crankshaft Thrust Washer

C4365899
凸轮轴
Camshaft

C4327431
齿轮室
Gear Chamber

C4975284
齿轮室密封垫
Gear Chamber Gasket

C4327429
齿轮室盖
Gear Chamber Cover

C4327561/C5472355
凸轮轴齿轮
Camshaft Gear

C5472343
曲轴齿轮
Crankshaft Gear

C2874044
前油封座
Front Oil Seal Seat

C3685173
曲轴前油封
Crankshaft Front Oil Seal

C4962603
曲轴后油封
Crankshaft Rear Oil Seal

C4327556
惰齿轮
Idler Gear

C4327564
惰轮轴
Idler Shaft

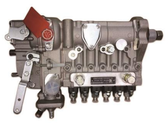
C6463402
燃油泵总成
Fuel Pump Assy

C2872544
喷油器
Fuel Injector

C5713710
燃油泵密封垫
Fuel Pump Gasket

5259557
燃油共轨管
Fuel Common Rail Pipe

C5465883-88
高压油管
High-Pressure Fuel Pipe

动力系统部件 POWERTRAIN COMPONENTS
Tel/WhatsAPP/FB:+8615871111333 Web:www.xrydongfeng.com E-mail:CEO@xrydongfeng.com

C2869983
凸轮从动杆
Cam Follower Rod

C3166309
ECM冷却板
ECM Cooling Plate

C4316807
进气预热器
Intake Air Preheater

C5472363
机油泵
Oil Pump

C5580047
水泵
Water Pump

C5633160
气阀室罩
Valve Cover

C5711816
油底壳
Oil Pan

C4975069
油底壳密封垫
Oil Pan Gasket

C2864924
机油吸油管
Oil Suction Pipe

C4952629
节温器
Thermostat

C5555942
增压器
Turbocharger

C4999869
增压器密封垫
Turbocharger Gasket

C2874286/C4327344
增压器管
Turbocharger Pipe

C4365900/C4316767
排气歧管
Exhaust Manifold

C2874586
进气过渡管
Intake Transition Pipe

C2874377
皮带涨紧轮
Drive Belt Tensioner

C2874071/240
惰轮
Idler Pulley

C5580037
多楔带
Serpentine Belt

C5712430
机油标尺
Engine Oil Dipstick

C4975215
机油冷却座密封垫
Oil Cooler Housing Gasket

C4327369/FS36259
燃油滤清器
Fuel Filter

C4365703/FF5687
燃油滤清器
Fuel Filter

C6469602/LF9080
机油滤清器
Oil-Gas Separator

1125005-H02B1
油水分离器及接头合件
Oil-Water Separator
and Joint Assy

1125030-H02B0-SFG
油水分离器滤芯总成
Water-in-Fuel Separator
Filter Element Assy

C2874016
燃油滤清器座
Fuel Filter Housing

C2870228
机油滤清器座
Oil Filter Housing

C4388894
机油冷却器总成
Engine Oil Cooler Assy

1001150-H12B0
软垫总成-发动机后悬置
Cushion Assy
Rear Engine Mount

1001030-H19H0
前悬胶垫
Front Suspension Rubber Pad

转向传动系统部件 STEERING TRANSMISSION SYSTEM COMPONENTS

2201010-HA401
传动轴带滑动叉总成
Driveshaft with Slip Yoke Assy

3401010-H0100
动力转向器总成
Power Steering Gear Assy

3401315-H12B0
转向器支架
Steering Gear Bracket

3412011-H0100
转向垂臂
Steering Pitman Arm

3001041/42-T38A0
左右转向节臂
Left and Right
Steering Knuckle Arms

3413050-H0100
横拉杆总成
Track Rod Assy

3412159/60-K20X0
左右接头总成-横拉杆
Left and Right Joint Assy

3412110-H19C1
直拉杆总成
Drag Link Assy

3412159/60-H0101/K74M0
左右接头总成-直拉杆
Left and Right Drag
Link Joint Assy

3704240-C6200
电子转向柱锁
ESCL

C5612743
动力转向泵
Power Steering Pump

xC4365818
转向助力泵总成
Power Steering Pump Assy

3410010-TL380
转向油罐总成
Power Steering Fluid
Reservoir Assy

3410040-TL380
滤芯总成
Filter Element Assy

3405060-H12B0
油罐支架总成
Oil Tank Bracket Assy

3404010-C6201
转向传动装置总成
Steering Linkage Assy

3636510-TS362
转向角度传感器总成
Steering Angle Sensor Assy

3405110-H12B1
转向低压油管总成
Power Steering Low
Pressure Oil Pipe Assy

3405042-H12B0
转向机回油管
Power Steering Return Hose

3405030-TL770
方向机进油管
Power Steering Pressure Hose

1700050-TV523
变速箱总成
Transmission Assy

3540520-H02B0
缓速器
Retarder

C5465758
飞轮壳
Flywheel Housing

0501.215.163
缓速器滤芯
Retarder Filter Element

0501.333.848
滤芯-变速箱
Filter Element- Transmission

1601090-H01V0
离合器盖和压盘总成
Clutch Cover and
Pressure Plate Assy

1601130-H01V0
离合器从动盘总成
Clutch Driven Disc Assy

0501.224.701
离合器分离轴承
Clutch Release Bearing

C4365907
飞轮
Flywheel

C3680913
飞轮齿圈
Flywheel Ring Gear

底盘系统部件 CHASSIS SYSTEM COMPONENTS

2702010-HA432
鞍座总成
Saddle Assy

2701010-H03E0
连接板-鞍座
Connecting Plate - Saddle

3101015-TF081
轮辋轮辐焊合件
Rim and Spoke Weldment

1101010-HA402
燃油箱总成
Fuel Tank Assy

1101010-HA401
燃油箱总成
Fuel Tank Assy

3000010-HA40E
前轴总成
Front Axle Assy

3001011-H0300
前轴
Front Axle

3001015/16-HA400
左右转向节总成
Left and Right Steering
Knuckle Assy

SYR132Z02-04015
轮毂
Hub

3501410-K20X0
前左盘式制动器
Front Left Disc Brake

2400010-HA432
后桥、轮毂及刹车总成
Rear Axle & Hub & Brake Assy

2401010-KE02A
后桥壳总成
Axle Housing Assembly

2402010-KE02GA
后桥主减速器总成
Rear Axle Main Reducer Assy

2402110-KE02A
后桥减速器壳
Rear Axle Reducer Housing

F24031KE1437
后桥主从动锥齿轮
Rear Axle Drive and
Driven Bevel Gears

2403065/66-KE01C
半轴
Half Shaft

2402310-T76V0
差速器总成
Differential Assy

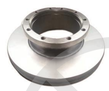

3502375-T61J0
制动盘
Brake Disc

3502365-H0300B
后轮毂及制动盘总成
Rear Wheel Hub and
Brake Disc Assy

3502420/25-H18A0
制动器及气室总成
Brake and Air Chamber Assy

2931040-HA42E
推力杆总成-后桥
Thrust Rod Assy - Rear Axle

2931070-HA42E
V型推力杆总成 -后桥
V-Type Thrust Rod
Assy - Rear Axle

2908010-H19C0
横向稳定杆总成
Anti-Roll Bar Assy

2906010-HA41E
前横向稳定杆总成
Front Stabilizer Bar Assy

2908025-H19CE
吊杆总成
Hanger Rod Assy

2912010-H02BE
前钢板弹簧总成
Front Leaf Spring Assy

2935305/06-X7620
左右托臂梁及橡胶衬套总成
Support Arm Beam Assy

2918020-H19C1/C2
空气弹簧总成
Air Spring Assy

2921010-H02VE
减振器总成
Shock Absorber Assy

2901131-H0000/KQ6H0
U形螺栓-前悬架
U-bolt - Front Suspension